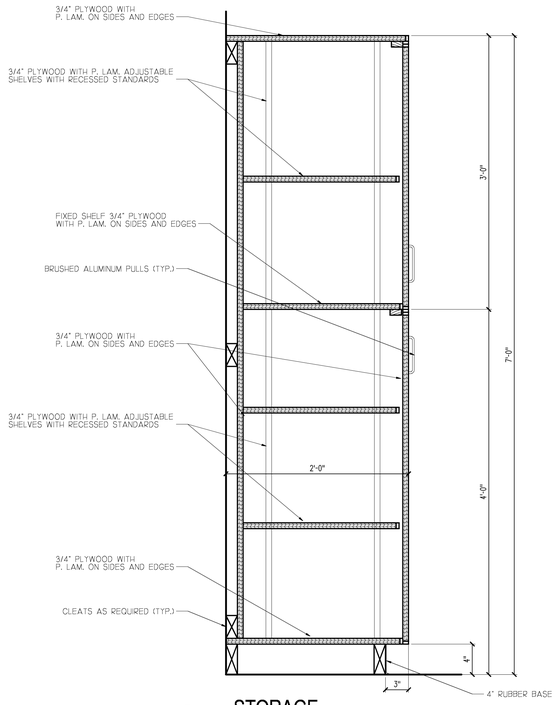

C3 STORAGE CABINET SECTION

SCALE: 1½" = 1'-0"

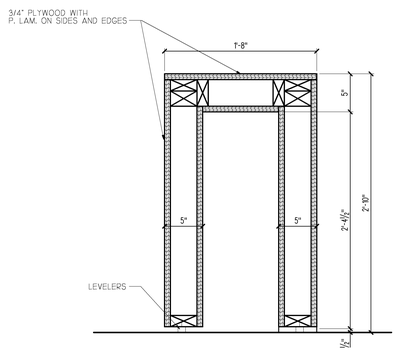

B1 MERCHANDISING TABLE AT WALL SECTION

SCALE: 1½" = 1'-0"

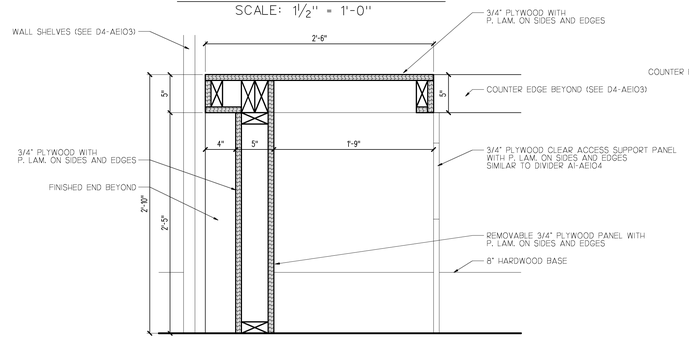

B3 POINT OF SALE KNEE SPACE SECTION

SCALE: 1½" = 1'-0"

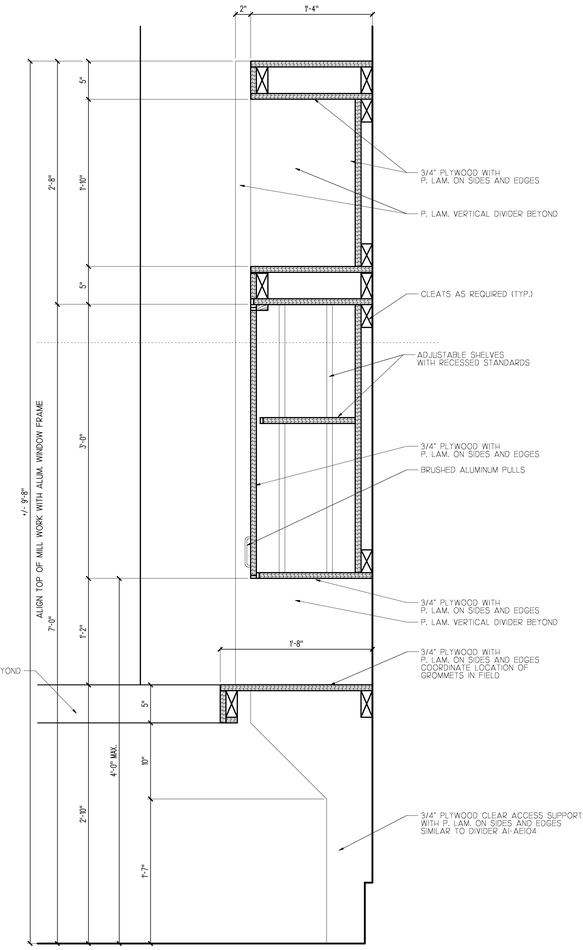

B4 POINT OF SALE WALL SECTION

SCALE: 1½" = 1'-0"

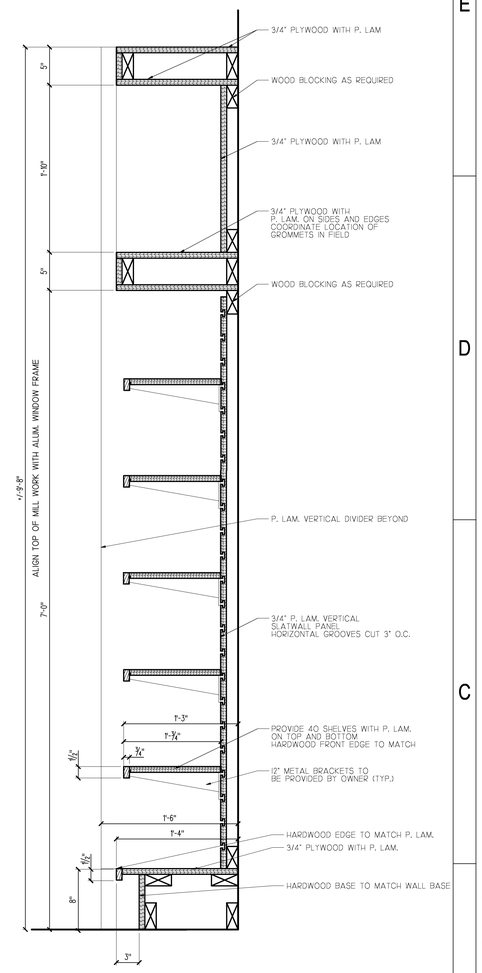

B6 MECHANDISING WALL SECTION

SCALE: 1½" = 1'-0"

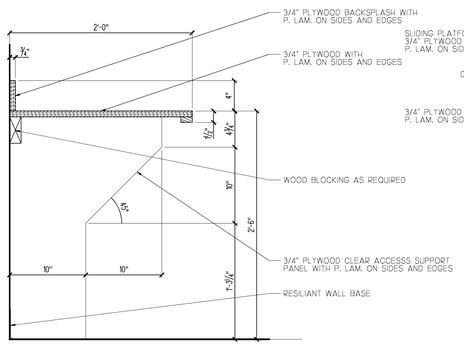

A1 SECTION

SCALE: 1½" = 1'-0"

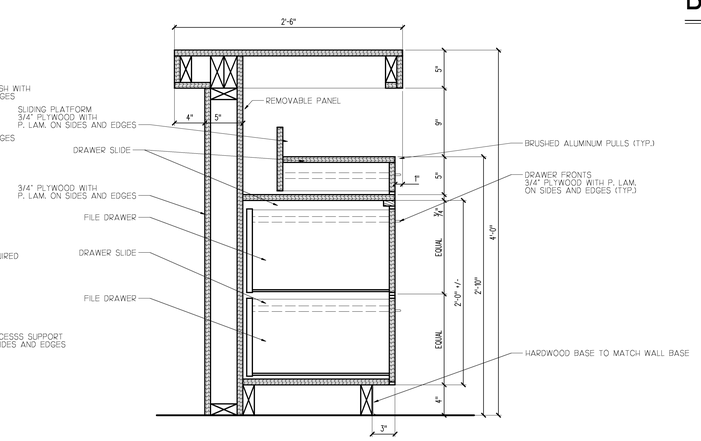

A3 POINT OF SALE CABINET SECTION

SCALE: 1½" = 1'-0"

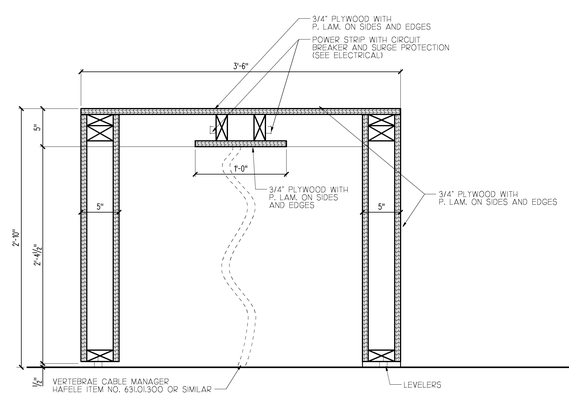

A4 POINT OF SALE WALL SECTION

SCALE: 1½" = 1'-0"

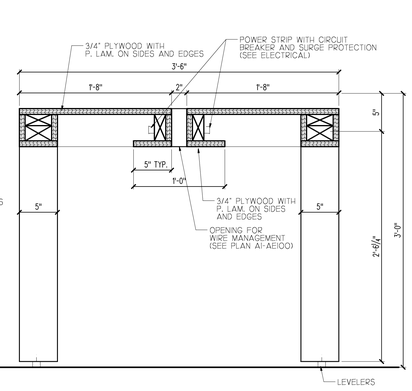

A6 MERCHANDISING TABLE SECTION

SCALE: 1½" = 1'-0"

THE FWA GROUP

ARCHITECTS

■ 500 East Blvd
Charlotte, NC 28203
(704) 332-7004
(704) 332-6529 fax

☐ 2530 Meridian Parkway
Suite 300
Durham, NC 27713
(919) 806-4399
(919) 806-4301 fax

☐ 10 Executive Park Road
PO Box 5910
Hilton Head Island, SC 29938
(843) 785-2199
(843) 785-6801 fax

☐ 155 East Boardwalk Drive
Suite 300
Fort Collins, CO 80525
(970) 232-3125
(970) 232-3101 fax

THE FWA GROUP, P.A. REGISTERED ARCHITECTURAL CORPORATION CERT. NO. 50 NORTH CAROLINA CHARLOTTE, N.C.

KATHRYN LAURIA HORNE REGISTERED ARCHITECT 6117 NORTH CAROLINA CHARLOTTE, N.C.

UNC CHARLOTTE

STUDENT UNION

UNIVERSITY OF NORTH CAROLINA AT CHARLOTTE

RETAIL NO. 2 & 4 UPFIT

CODE 40226 ITEM 304
SCO No. 020572301A

MARK	DATE	DESCRIPTION
	08/30/09	RETAIL UPFIT

PROJECT NO: FWA 2214

DRAWN BY: CMJ

APPROVED BY: KLH

THESE DRAWINGS AND THE PROJECT MANUAL ARE INSTRUMENTS OF SERVICE AND REMAIN THE PROPERTY OF THE FWA GROUP ARCHITECTS. UNAUTHORIZED DUPLICATION OR REUSE WITHOUT WRITTEN CONSENT IS PROHIBITED.

SHEET TITLE

MILLWORK DETAILS

SHEET NUMBER

AE104

J:\2214-26_Apple Store\0000-J_CAD\XXXXAE04.dgn
1:49:34 PM
9/30/2009